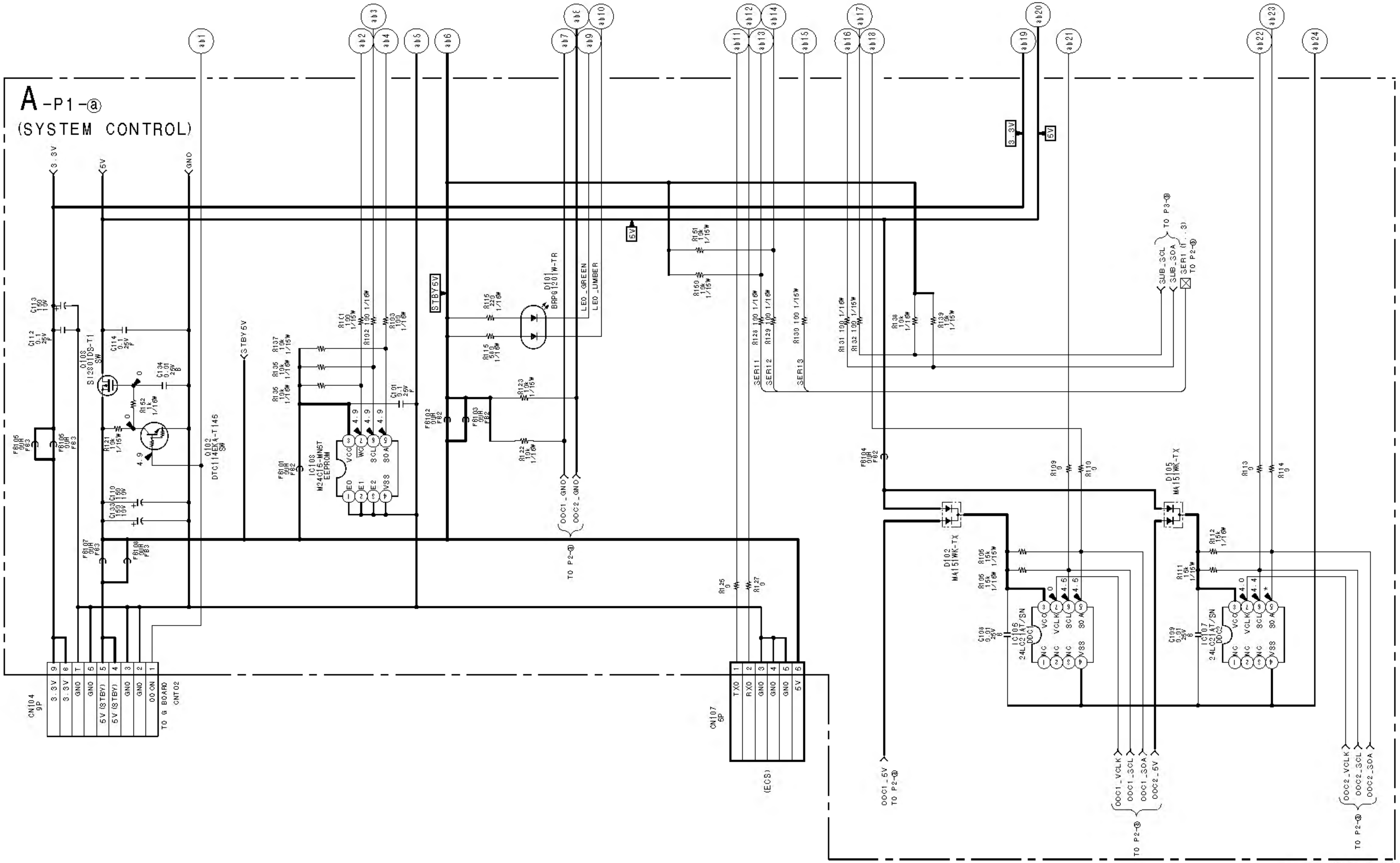
A-P1-ⓐ
(SYSTEM CONTROL)
ab1
ab2
ab3
ab4
ab5
ab6
ab7
ab8
ab9
ab10
ab11
ab12
ab13
ab14
ab15
ab16
ab17
ab18
ab19
ab20
ab21
ab22
ab23
ab24
3.3V
5V
GND
STBY5V
C113 10 10V
C112 0.1 25V F
C114 0.1 25V F
C134 0.01 25V B
Q105 SI2301DS-T1 SW
Q102 DTC114EKA-T146 SW
R152 1k 1/16W
R121 10k 1/16W
FB105 0UH FB3
FB106 0UH FB3
C110 150 10V
C133 150 10V
FB107 0UH FB3
FB108 0UH FB3
R137 10k 1/16W
R135 10k 1/16W
R136 10k 1/16W
R101 100 1/16W
R102 100 1/16W
R103 100 1/16W
C101 0.1 25V F
IC108 M24C16-WN6T EEPROM
VCC
WC
SCL
SDA
E0
E1
E2
VSS
4.9
FB101 0UH FB2
FB102 0UH FB2
FB103 0UH FB2
R115 220 1/16W
R116 560 1/16W
D101 BRPG1201W-TR
LED_GREEN
LED_UMBER
R123 10k 1/16W
R122 10k 1/16W
DDC1_GND
DDC2_GND
TO P2-ⓓ
R151 10k 1/16W
R150 10k 1/16W
R128 100 1/16W
R129 100 1/16W
R130 100 1/16W
R131 100 1/16W
R132 100 1/16W
R138 10k 1/16W
R139 10k 1/16W
SER11
SER12
SER13
SUB_SCL
SUB_SDA
SER1 (1/3)
TO P3-ⓐ
TO P2-ⓓ
FB104 0UH FB2
R109 0
R110 0
R113 0
R114 0
D102 MA151WK-TX
D105 MA151WK-TX
R105 15k 1/16W
R106 15k 1/16W
R111 15k 1/16W
R112 15k 1/16W
C108 0.01 25V B
C109 0.01 25V B
IC105 24LC21AT/SN DDC1
IC107 24LC21AT/SN DDC2
NC
VCLK
4.5
4.0
4.4
R125 0
R127 0
CN104 9P
3.3V
GND
5V (STBY)
DDON
TO G BOARD CN702
CN107 6P
TXD
RXD
(ECS)
DDC1_5V TO P2-ⓓ
DDC1_VCLK
DDC1_SCL
DDC1_SDA
DDC2_5V
TO P2-ⓓ
DDC2_VCLK
DDC2_SCL
DDC2_SDA
TO P2-ⓓ

G -P2
(AUDIO IN)

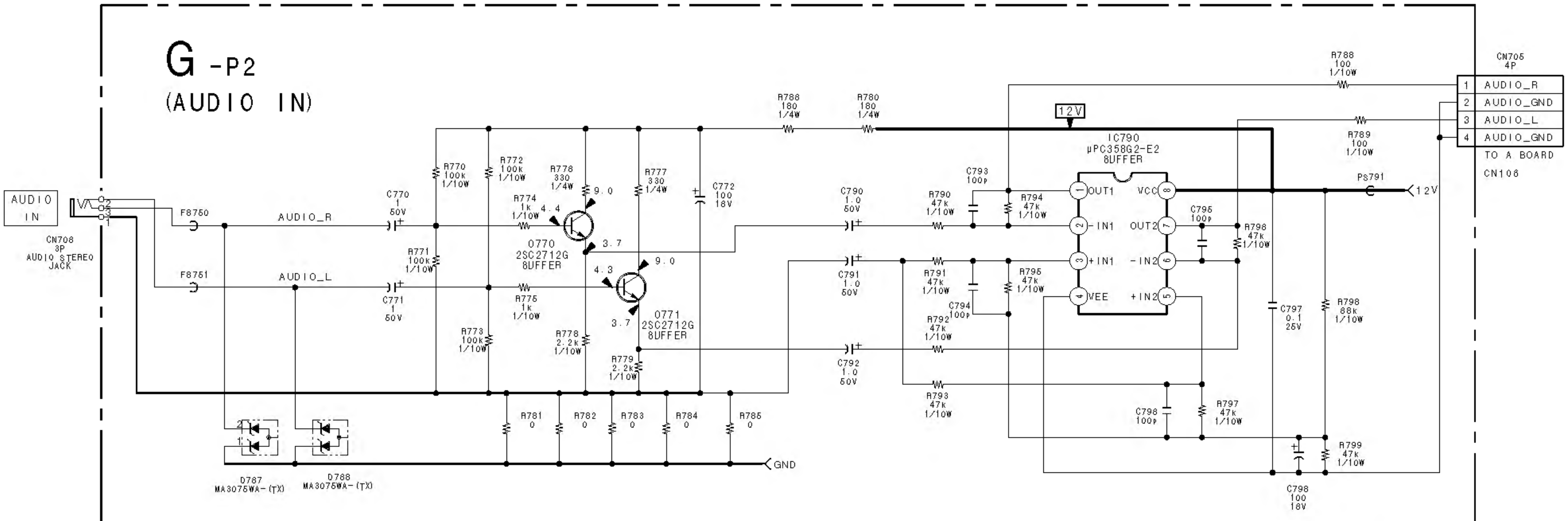

AUDIO IN
CN708
3P
AUDIO STEREO JACK
F8750
F8751
AUDIO_R
AUDIO_L
C770
1
50V
C771
1
50V
R770
100k
1/10W
R771
100k
1/10W
R772
100k
1/10W
R773
100k
1/10W
R774
1k
1/10W
R775
1k
1/10W
R778
330
1/4W
R777
330
1/4W
R778
2.2k
1/10W
R779
2.2k
1/10W
4.4
9.0
3.7
4.3
9.0
3.7
Q770
2SC2712G
BUFFER
Q771
2SC2712G
BUFFER
C772
100
16V
R788
180
1/4W
R780
180
1/4W
R781
0
R782
0
R783
0
R784
0
R785
0
D787
MA3075WA-(TX)
D788
MA3075WA-(TX)
GND
12V
C790
1.0
50V
C791
1.0
50V
C792
1.0
50V
R790
47k
1/10W
R791
47k
1/10W
R792
47k
1/10W
R793
47k
1/10W
C793
100p
C794
100p
R794
47k
1/10W
R795
47k
1/10W
IC790
μPC358G2-E2
BUFFER
OUT1
-IN1
+IN1
VEE
VCC
OUT2
-IN2
+IN2
1
2
3
4
5
6
7
8
C795
100p
R798
47k
1/10W
C796
100p
R797
47k
1/10W
C797
0.1
25V
R798
88k
1/10W
R799
47k
1/10W
C798
100
16V
PS791
12V
R788
100
1/10W
R789
100
1/10W
CN705
4P
1 AUDIO_R
2 AUDIO_GND
3 AUDIO_L
4 AUDIO_GND
TO A BOARD
CN106

B-883534<AEP>-G-P2 (24)

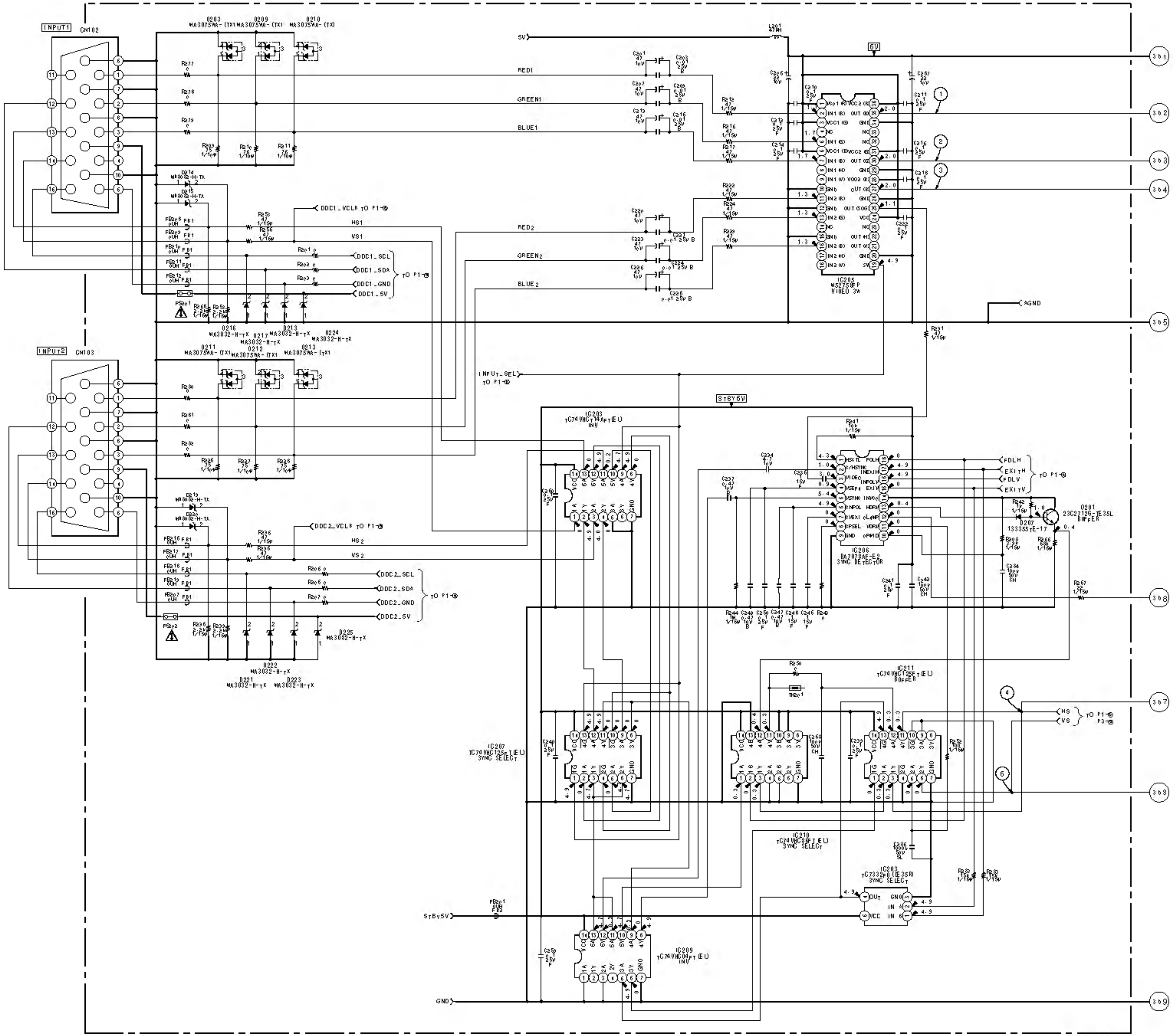
INPUT1
CN102
INPUT2
CN103
D203 MA3075WA-(TX)
D209 MA3075WA-(TX)
D210 MA3075WA-(TX)
D211 MA3075WA-(TX)
D212 MA3075WA-(TX)
D213 MA3075WA-(TX)
D214 MA3032-H-TX
D215 MA3032-H-TX
D216 MA3032-H-TX
D217 MA3032-H-TX
D213 MA3032-H-TX
D224 MA3032-H-TX
D219 MA3032-H-TX
D220 MA3032-H-TX
D221 MA3032-H-TX
D222 MA3032-H-TX
D223 MA3032-H-TX
D225 MA3032-H-TX
R277 0
R276 0
R279 0
R209 75 1/10W
R210 75 1/10W
R211 75 1/10W
R280 0
R261 0
R282 0
R226 75 1/10W
R227 75 1/10W
R228 75 1/10W
FB206 0UH FB1
FB209 0UH FB1
FB210 0UH FB1
FB211 0UH FB1
FB212 0UH FB1
FB216 0UH FB1
FB217 0UH FB1
FB218 0UH FB1
FB219 0UH FB1
FB207 0UH FB1
PS201
PS202
R253 47 1/16W
R256 47 1/16W
R236 47 1/16W
R201 0
R202 0
R203 0
R206 0
R207 0
R268 2.2k 1/16W
R258 2.2k 1/16W
R238 2.2k 1/16W
R239 2.2k 1/16W
DDC1_VCLK TO P1-⑩
HS1
VS1
DDC1_SCL
DDC1_SDA
DDC1_GND
DDC1_5V
TO P1-⑩
DDC2_VCLK TO P1-⑩
HS2
VS2
DDC2_SCL
DDC2_SDA
DDC2_GND
DDC2_5V
TO P1-⑩
5V
RED1
GREEN1
BLUE1
RED2
GREEN2
BLUE2
L201 47µH
6V
C201 47 10V
C202 0.01 25V B
C207 47 10V
C209 0.01 25V B
C213 47 10V
C215 0.01 25V B
C220 47 10V
C221 0.01 25V B
C223 47 10V
C224 0.01 25V B
C226 47 10V
C225 0.01 25V B
C206 22 10V
C267 22 10V
C210 0.1 25V F
C211 0.1 25V F
C212 0.1 25V F
C214 0.1 25V F
C216 0.1 25V F
C218 0.1 25V F
C222 0.1 25V F
R212 47 1/16W
R216 47 1/16W
R217 47 1/16W
R232 47 1/16W
R234 47 1/16W
R229 47 1/16W
VCC1 (R)
IN1 (R)
VCC1 (G)
NC
IN1 (G)
VCC1 (B)
IN1 (B)
IN1 (H)
IN1 (V)
GND
IN2 (R)
GND
IN2 (G)
NC
GND
IN2 (B)
IN2 (H)
IN2 (V)
VCC2 (R)
OUT (R)
GND
NC
NC
VCC2 (G)
OUT (G)
GND
VCC2 (B)
OUT (B)
GND
OUT (SOG)
VCC
NC
OUT (H)
OUT (V)
GND
SW
1.7
1.3
2.0
1.1
4.9
IC205 M52758FP VIDEO SW
AGND
R231 47 1/16W
INPUT_SEL TO P1-⑩
STBY6V
IC203 TC74VHCT14AFT(EL) INV
C260 0.1 25V F
IC206 BA7078AF-E2 SYNC DETECTOR
HSCTL
C/HSYNC
VIDEO
VSEP
VSYNC
CNPOL
CVEXT
CPSEL
GND
POLH
INEXIH
INPOLV
EXIV
INVCO
HDRV
LONP
VDRV
CPVID
R241 10k 1/16W
C234 4.7 10V
C236 1 15V F
C237 0.47 10V B
R242 1k 1/16W
D207 1SS355TE-17
Q201 2SC2712G-TE85L BUFFER
R208 3.3k 1/16W
R266 680 1/16W
C284 100p 50V CH
C241 0.1 25V F
C242 100p 50V CH
R267 22 1/16W
R244 1M 1/16W
C248 0.47 10V B
C250 0.1 25V F
C247 0.47 10V B
C246 1 15V F
C245 1 15V F
R243 0
FDLH
EXITH
FDLV
EXITV
TO P1-⑩
IC207 TC74VHC125FT(EL) SYNC SELECT
C240 0.1 25V F
R250 0
TH201
C268 100p 50V CH
IC211 TC74VHC125FT(EL) BUFFER
C239 0.1 25V F
R252 100 1/16W
HS
VS
TO P1-⑩ P3-⑩
IC210 TC74VHC86FT(EL) SYNC SELECT
C286 1000p 50V SL
IC203 TC7S32F(TE85R) SYNC SELECT
OUT
GND
IN A
IN B
VCC
R263 15k 1/16W
R262 15k 1/16W
STBY5V
FB201 0UH FB2
C259 0.1 25V F
IC209 TC74VHC04FT(EL) INV
GND
①
②
③
④
⑥
3b1
3b2
3b3
3b4
3b5
3b7
3b8
3b3
3b9

B-SS3 S3 4<AEF>-A-F2-⑩ (24)

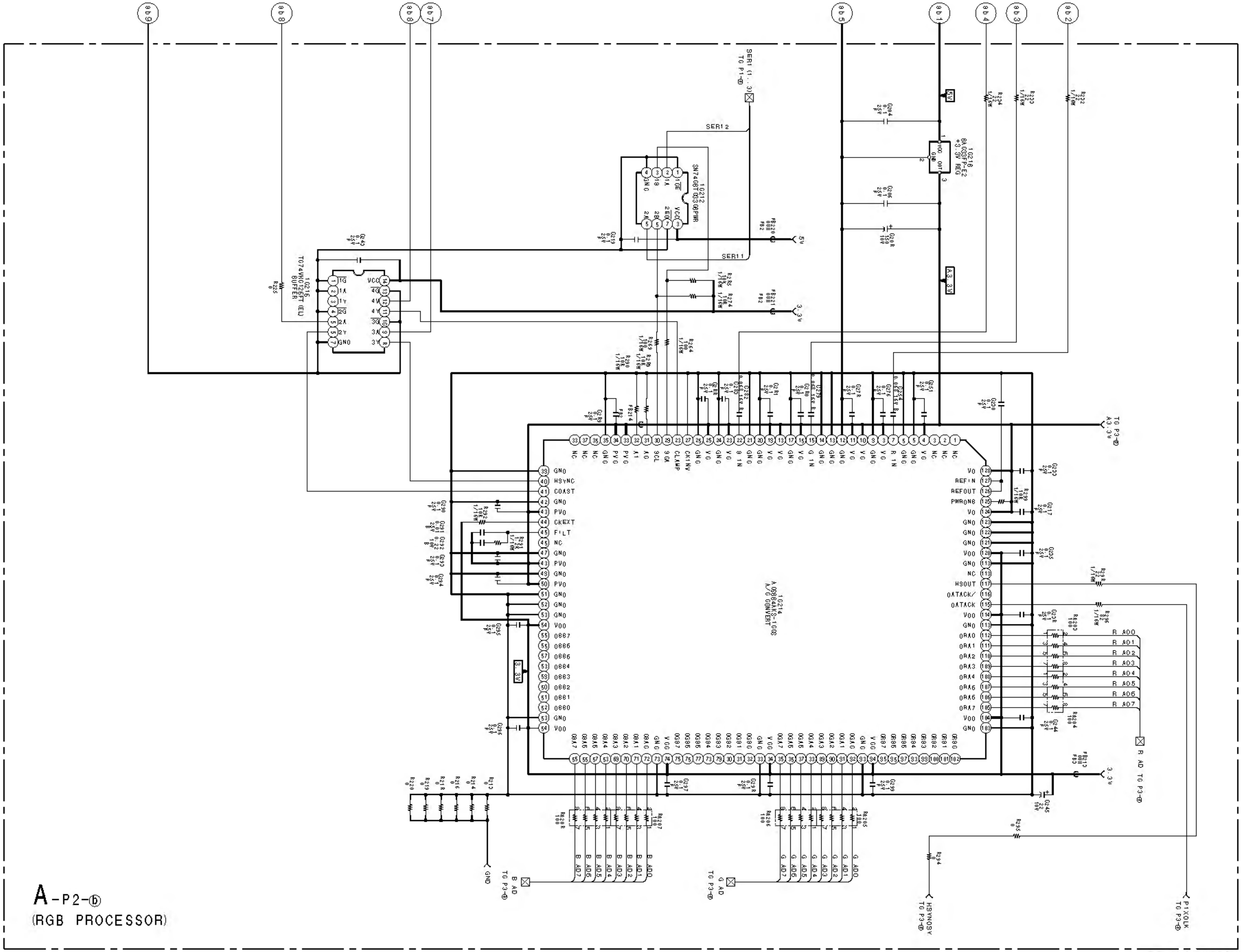
8b9
8b8
8b8
8b7
8b5
8b1
8b4
8b3
8b2
SER1(1...3) TO P1-ⓐ
SER12
SER11
IC212 SN74GBT0D3GPWR
IC216 TC74VHC125FT(EL) BUFFER
IC218 BA033FP-E2 +3.3V REG
5V
A3.3V
3.3V
IC214 AD9884AKS-100 A/D CONVERT
TO P3-ⓐ A3.3V
GND
HSYNC
COAST
PVD
CKEXT
FILT
NC
VDD
VD
REFIN
REFOUT
PWRDNB
HSOUT
DATACK/
DATACK
R AD0
R AD1
R AD2
R AD3
R AD4
R AD5
R AD6
R AD7
R AD TO P3-ⓐ
B AD0
B AD1
B AD2
B AD3
B AD4
B AD5
B AD6
B AD7
B AD TO P3-ⓐ
G AD0
G AD1
G AD2
G AD3
G AD4
G AD5
G AD6
G AD7
G AD TO P3-ⓐ
GND
HSYNCSY TO P3-ⓐ
PIXCLK TO P3-ⓐ
3.3V

A-P2-ⓑ
(RGB PROCESSOR)

A-P3-③
(SCAN CONVERTER)

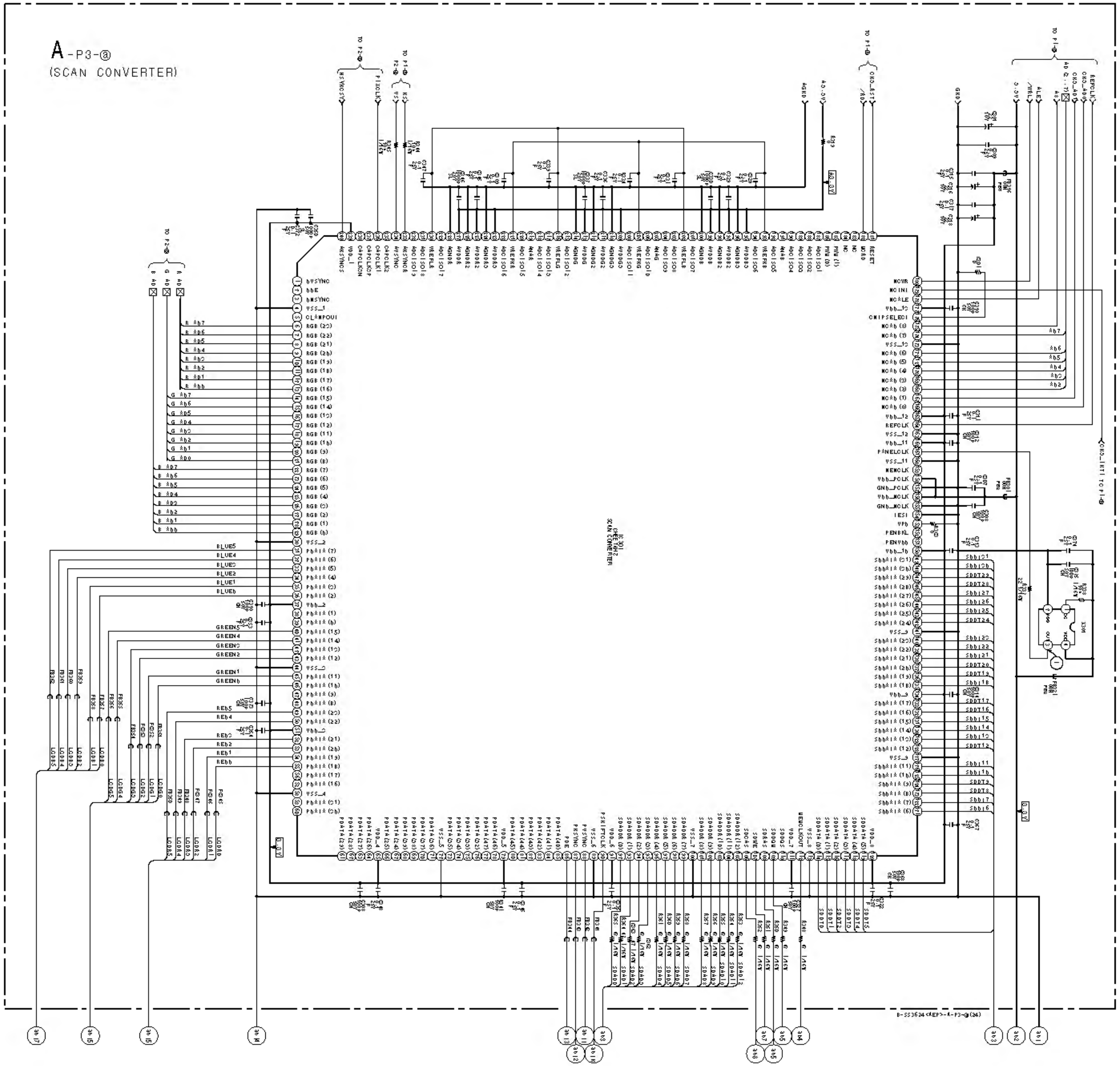
IC301
CHEETAH2
SCAN CONVERTER
TO P2-③
TO P1-③
HSYNCSYS
PIXCLKD
BLUE5
BLUE4
BLUE3
BLUE2
BLUE1
BLUE0
GREEN5
GREEN4
GREEN3
GREEN2
GREEN1
GREEN0
RED5
RED4
RED3
RED2
RED1
RED0
R AD7
R AD6
R AD5
R AD4
R AD3
R AD2
R AD1
R AD0
G AD7
G AD6
G AD5
G AD4
G AD3
G AD2
G AD1
G AD0
B AD7
B AD6
B AD5
B AD4
B AD3
B AD2
B AD1
B AD0
RESET
MCWR
MCINT
MCALE
CHIPSELECT
REFCLK
PANELCLK
MEMCLK
TEST
PENBKL
PENVDD
3.3V
X301
a b 1
a b 2
a b 3
a b 4
a b 5
a b 6
a b 8
a b 9
a b 10
a b 11
a b 12
a b 13
a b 14
a b 15
a b 16
a b 17

B-SS3624<AEP>-A-P3-③(24)

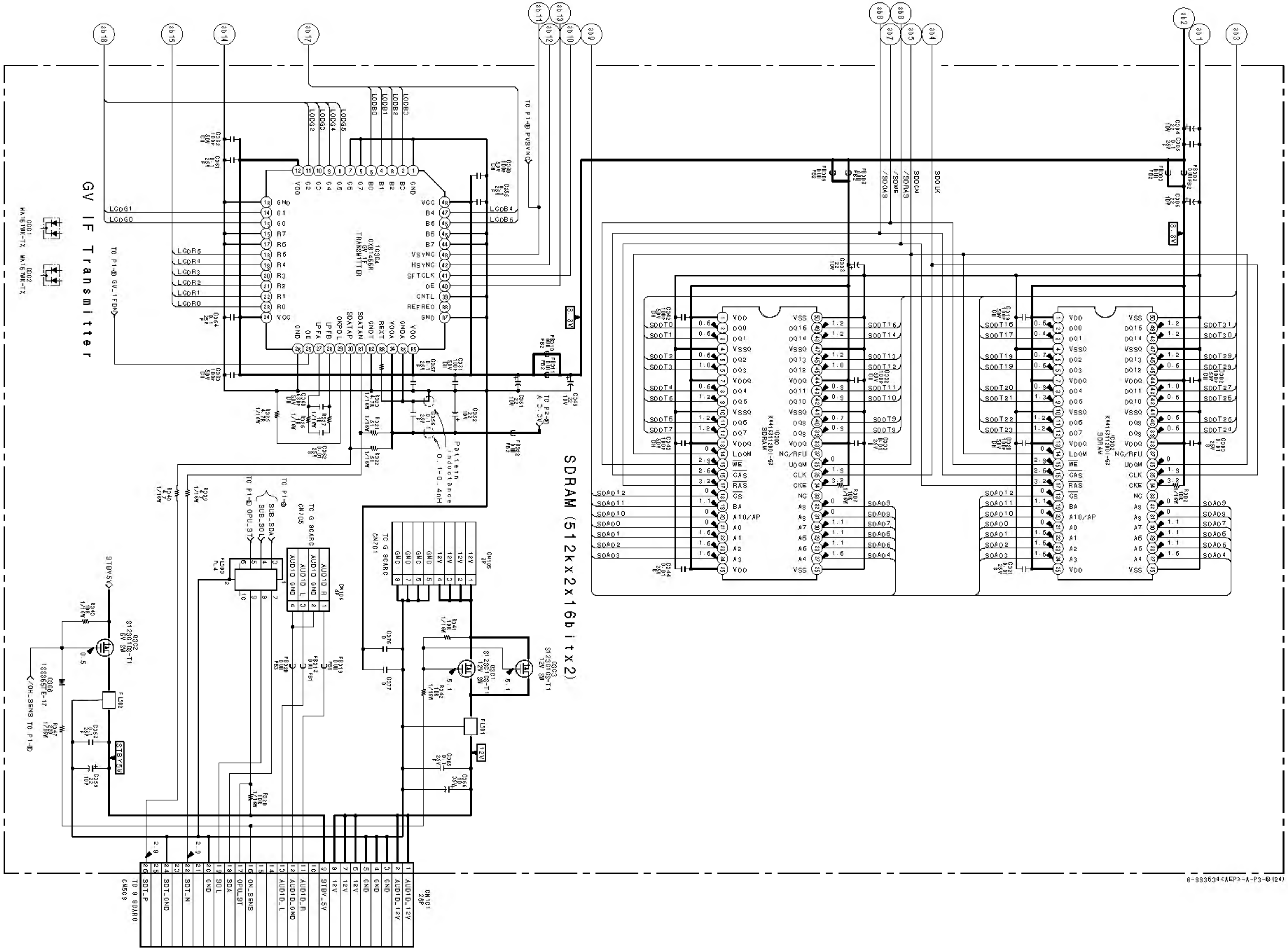
GV IF Transmitter
SDRAM (512kx2x16bitx2)
IC304 DS90C385A TRANSMITTER
IC300 K4S161622D-UC80 SDRAM
IC302 K4S161622D-UC80 SDRAM
TO P1-⊕ PVSYNC
TO P1-⊕ GV_IFDM
TO P1-⊕ OPU_ST
TO G 804AR0 CN705
TO G 804AR0 CN701
TO G 804AR0 CN509
CN101 28P
CN105 8P
CN106 4P
SUB_SDA
SUB_SCL
STBY5V
12V
3.3V
OH_SENS TO P1-⊕
Pattern inductance 0.1-0.4nH
SDT_P
SDT_GND
SDT_N
GND
SCL
SDA
OPU_ST
ON_SENS
AUDIO_L
AUDIO_GND
AUDIO_R
STBY_5V
AUDIO_12V

8-893634<AEP>-A-P3-⊙(24)

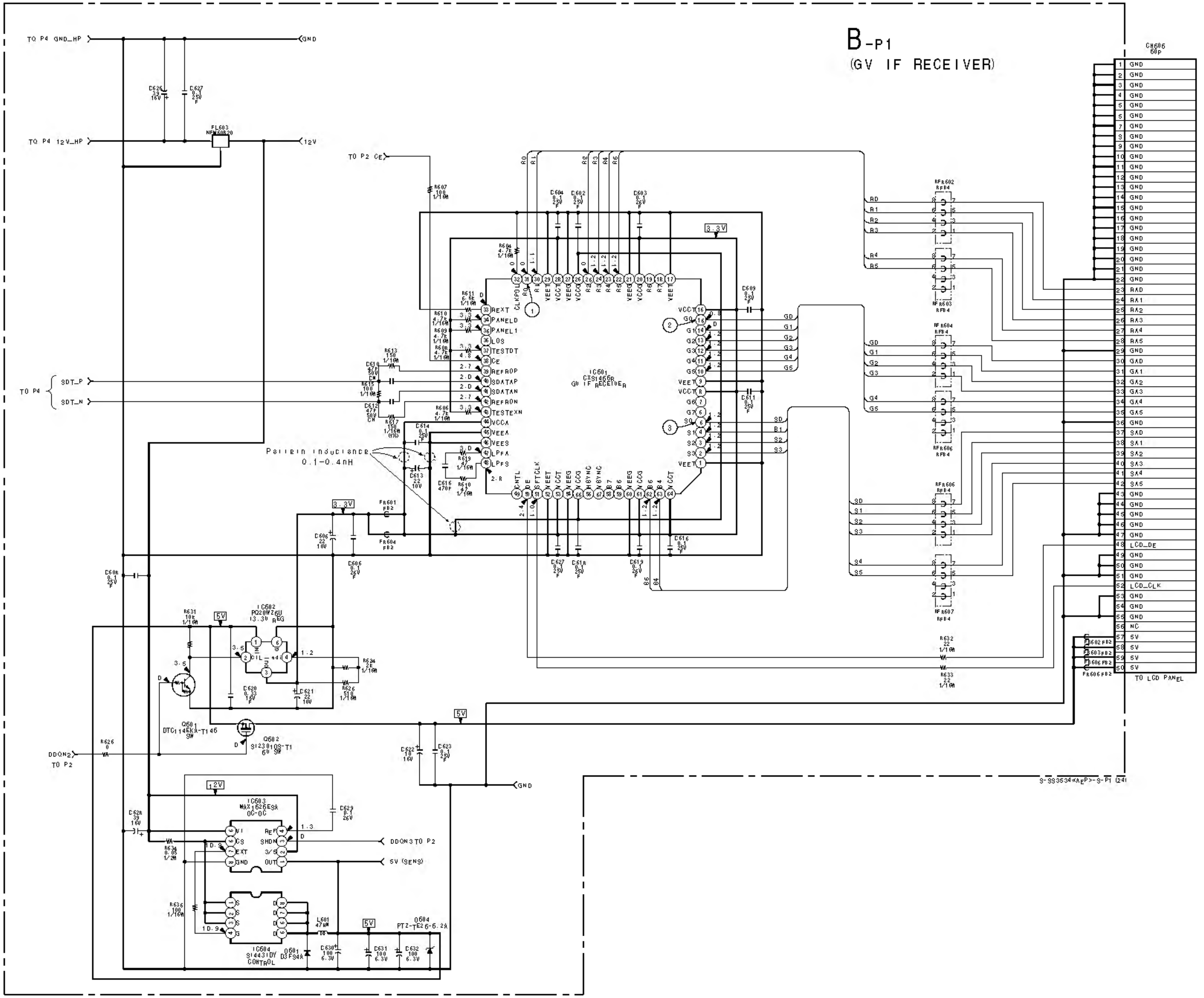

B-P1
(GV IF RECEIVER)
CN606
60P
1 GND
2 GND
3 GND
4 GND
5 GND
6 GND
7 GND
8 GND
9 GND
10 GND
11 GND
12 GND
13 GND
14 GND
15 GND
16 GND
17 GND
18 GND
19 GND
20 GND
21 GND
22 GND
23 RAD
24 RA1
25 RA2
26 RA3
27 RA4
28 RA5
29 GND
30 GAD
31 GA1
32 GA2
33 GA3
34 GA4
35 GA5
36 GND
37 SAD
38 SA1
39 SA2
40 SA3
41 SA4
42 SA5
43 GND
44 GND
45 GND
46 GND
47 GND
48 LCD_DE
49 GND
50 GND
51 GND
52 LCD_CLK
53 GND
54 GND
55 GND
56 NC
57 5V
58 5V
59 5V
60 5V
TO LCD PANEL
TO P4 GND_HP
GND
TO P4 12V_HP
12V
FL603
NFM60R20
C626
33
16V
C627
0.1
25V
TO P2 CE
R607
100
1/16W
IC601
CXD1466R
GV IF RECEIVER
REXT
PANEL0
PANEL1
LOS
TESTDT
CE
REFROP
SDATAP
SDATAN
REFRON
TESTEXN
VCCA
VEEA
VEES
LPFA
LPFS
VCCT
VEET
CLKPOL
CNTL
DE
TTCLK
HSYNC
VSYNC
VCCG
VEEG
R0
R1
R2
R3
R4
R5
G0
G1
G2
G3
G4
G5
S0
S1
S2
S3
S4
S5
B6
B4
C604
0.1
25V
C602
0.1
25V
C603
0.1
25V
C609
0.1
25V
C611
0.1
25V
3.3V
R604
4.7k
1/16W
R611
6.8k
1/16W
R610
4.7k
1/16W
R609
4.7k
1/16W
R608
4.7k
1/16W
R613
150
1/16W
R615
100
1/16W
R617
150
1/16W
R606
4.7k
1/16W
C610
47P
50V
CH
C612
47P
50V
CH
TO P4
SDT_P
SDT_N
C614
0.1
25V
C613
22
10V
C615
470P
R619
47
1/16W
R610
47
1/16W
Pattern inductance
0.1-0.4nH
3.3V
FB601
FB2
FB604
FB2
C605
22
10V
C606
0.1
25V
C617
0.1
25V
C618
0.1
25V
C619
0.1
25V
C616
0.1
25V
C608
0.1
25V
RF8602
RFB4
RF8603
RFB4
RF8604
RFB4
RF8605
RFB4
RF8606
RFB4
RF8607
RFB4
R632
22
1/16W
R633
22
1/16W
FB602
FB603
FB605
FB606
FB2
IC602
PQ20WZ6U
(3.3V REG)
5V
R631
10k
1/16W
R624
22
1/16W
R625
510
1/16W
C620
0.33
16V
C621
22
10V
Q601
DTC114EKA-T146
SW
Q602
Si2301DS-T1
6V SW
R626
0
DDON2
TO P2
5V
C622
10
16V
C623
0.1
25V
GND
12V
IC603
MAX1626ESA
DC-DC
C629
0.1
25V
C628
33
16V
R634
0.05
1/2W
V+
CS
EXT
GND
REF
SHDN
3/5
OUT
DDON3 TO P2
5V (SENS)
R636
100
1/16W
IC604
Si4431DY
CONTROL
D601
D3FS4A
L601
47uH
5V
D604
PTZ-TE25-6.2A
C630
100
6.3V
C631
100
6.3V
C632
100
6.3V

S-993534<AEP>-S-P1 (24)

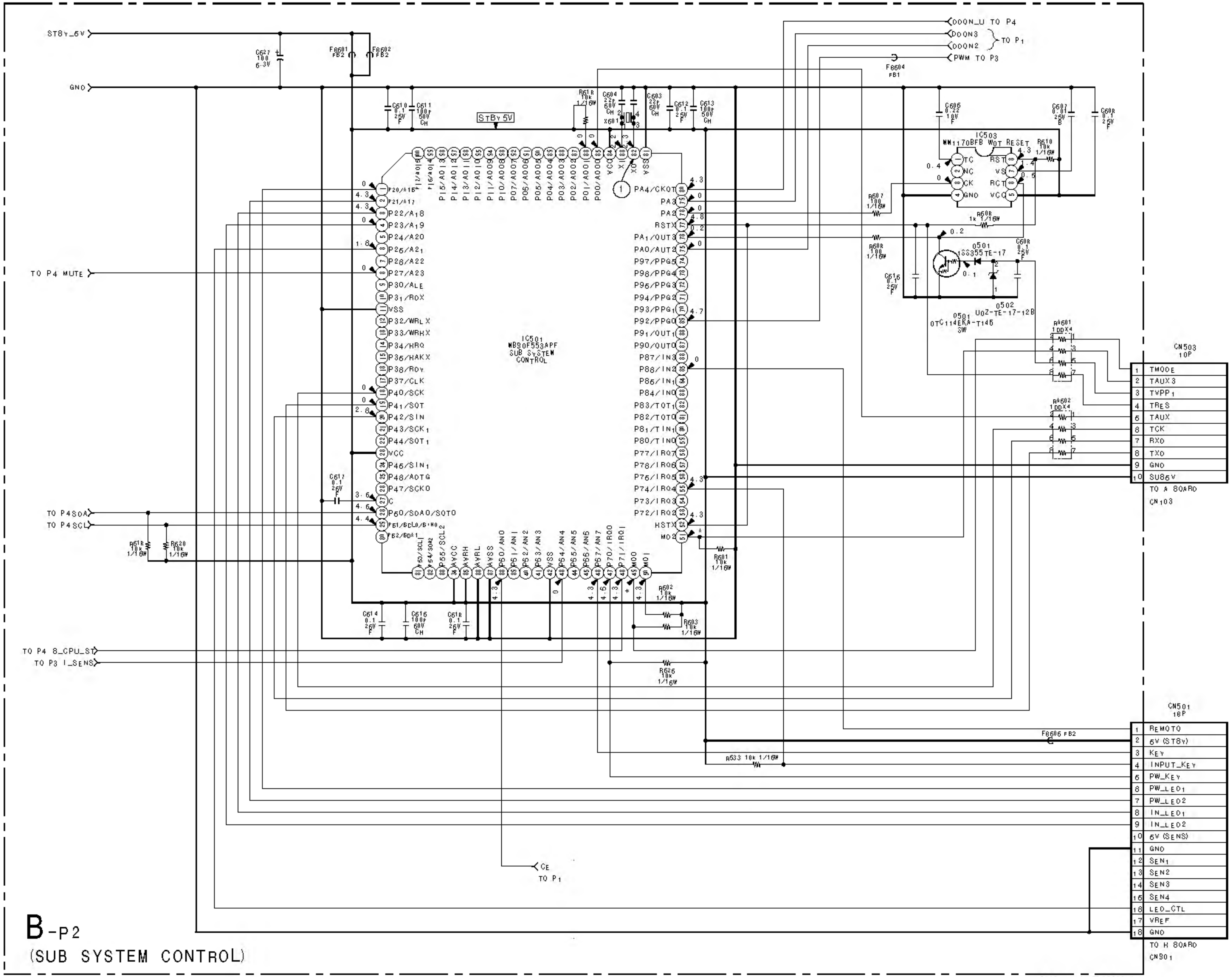
STBY_6V
GND
TO P4 MUTE
TO P4SDA
TO P4SCL
TO P4 S_CPU_ST
TO P3 I_SENS
C622 100 6.3V
FB601 FB2
FB602 FB2
C610 0.1 25V F
C611 100P 50V CH
STBY 5V
R618 10k 1/16W
C604 22P 50V CH
X601
C603 22P 50V CH
C612 0.1 25V F
C613 100P 50V CH
IC501 MB90F553APF SUB SYSTEM CONTROL
P20/A16
P21/A17
P22/A18
P23/A19
P24/A20
P25/A21
P26/A22
P27/A23
P30/ALE
P31/RDX
VSS
P32/WRLX
P33/WRHX
P34/HRQ
P35/HAKX
P36/RDY
P37/CLK
P40/SCK
P41/SOT
P42/SIN
P43/SCK1
P44/SOT1
VCC
P45/SIN1
P46/ADTG
P47/SCKO
C
P50/SDA0/SOT0
P51/SCL0/SIN0
P52/SDA1
P53/SCL1
P54/SDA2
P55/SCL2
AVCC
AVRH
AVRL
AVSS
P50/AN0
P51/AN1
P52/AN2
P53/AN3
VSS
P54/AN4
P55/AN5
P56/AN6
P57/AN7
P70/IR00
P71/IR01
MD0
MD1
MD2
HSTX
P72/IR02
P73/IR03
P74/IR04
P75/IR05
P76/IR06
P77/IR07
P80/TIN0
P81/TIN1
P82/TOT0
P83/TOT1
P84/IN0
P85/IN1
P86/IN2
P87/IN3
P90/OUT0
P91/OUT1
P92/PPG0
P93/PPG1
P94/PPG2
P95/PPG3
P96/PPG4
P97/PPG5
PA0/AUT2
PA1/OUT3
RSTX
PA2
PA3
PA4/CKOT
VSS
X1
X0
VCC
P00/AD00
P01/AD01
P02/AD02
P03/AD03
P04/AD04
P05/AD05
P06/AD06
P07/AD07
P10/AD08
P11/AD09
P12/AD10
P13/AD11
P14/AD12
P15/AD13
P16/AD14
P17/AD15
C617 0.1 25V F
R619 10k 1/16W
R620 10k 1/16W
C614 0.1 25V F
C615 100P 50V CH
C618 0.1 25V F
R601 10k 1/16W
R602 10k 1/16W
R603 10k 1/16W
R626 10k 1/16W
DOON_U TO P4
DOON3
DOON2
TO P1
PWM TO P3
FB604 FB1
C605 0.22 10V F
C607 0.01 25V B
C608 0.1 25V F
IC503 MM1170BFB WDT RESET
TC
NC
CK
GND
RST
VS
RCT
VCC
R610 10k 1/16W
R607 100 1/16W
R608 1k 1/16W
R606 100 1/16W
Q501 SS355TE-17
C609 0.1 25V F
C616 0.1 25V F
D502 UDZ-TE-17-12B
Q501 DTC114EKA-T146 SW
RA601 100x4
RA602 100x4
CN503 10P
TMODE
TAUX3
TVPP1
TRES
TAUX
TCK
RXD
TXD
GND
SUB5V
TO A BOARD CN103
CN501 18P
REMOTO
5V (STBY)
KEY
INPUT_KEY
PW_KEY
PW_LED1
PW_LED2
IN_LED1
IN_LED2
5V (SENS)
GND
SEN1
SEN2
SEN3
SEN4
LED_CTL
VREF
GND
TO H BOARD CN901
FB606 FB2
R533 10k 1/16W
CE TO P1

B-P2
(SUB SYSTEM CONTROL)

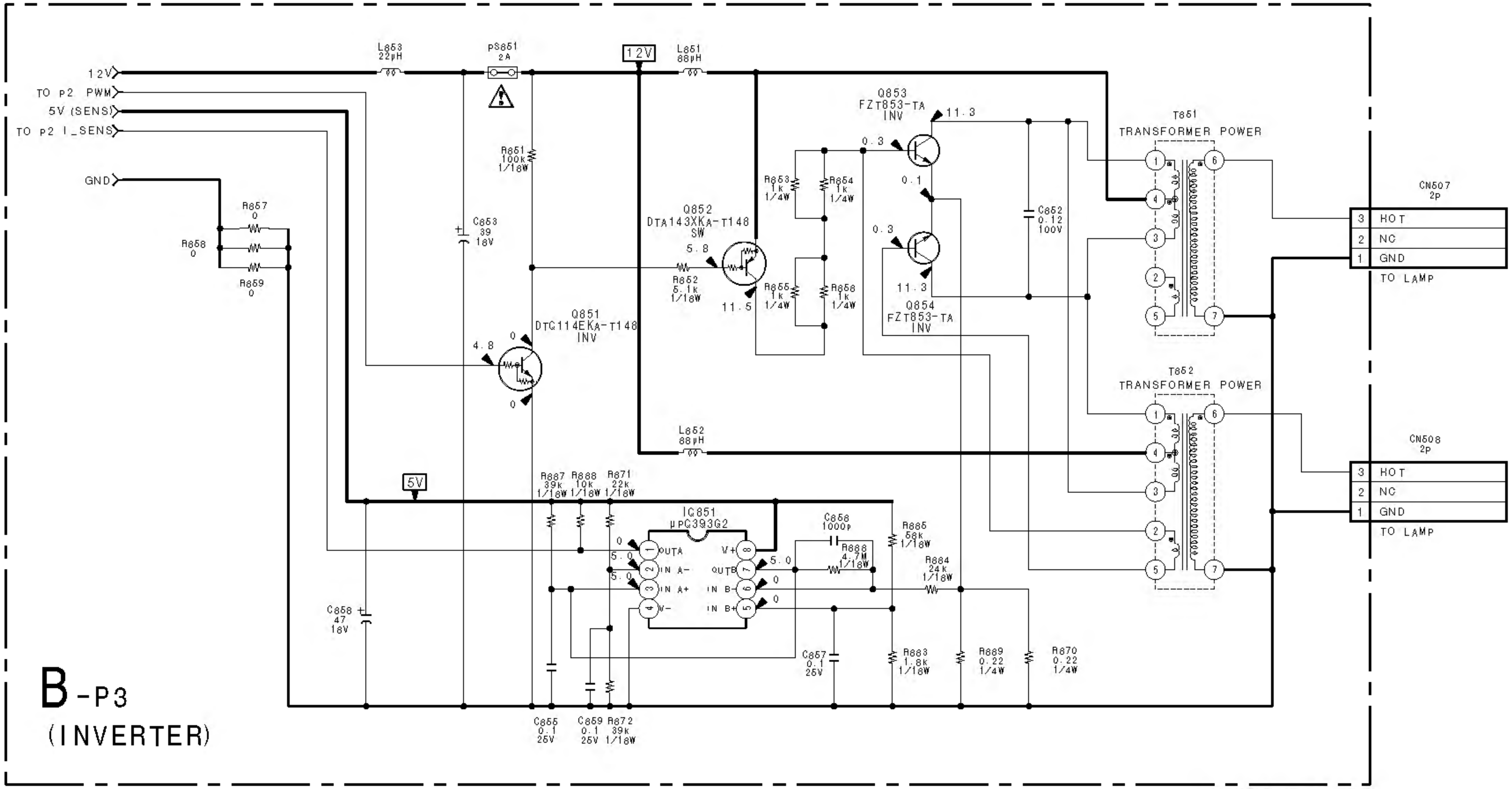
12V
TO p2 PWM
5V (SENS)
TO p2 I_SENS
GND
L853 22μH
PS851 2A
12V
L851 88μH
R851 100k 1/18W
C853 39 18V
R857 0
R858 0
R859 0
Q852 DTA143XKA-T148 SW
5.8
R852 5.1k 1/18W
11.5
Q851 DTC114EKA-T148 INV
4.8
0
0
R853 1k 1/4W
R854 1k 1/4W
R855 1k 1/4W
R856 1k 1/4W
Q853 FZT853-TA INV
0.3
11.3
0.1
0.3
11.3
Q854 FZT853-TA INV
C852 0.12 100V
T851 TRANSFORMER POWER
T852 TRANSFORMER POWER
1
2
3
4
5
6
7
CN507 2p
CN508 2p
3 HOT
2 NC
1 GND
TO LAMP
L852 88μH
5V
R887 39k 1/18W
R888 10k 1/18W
R871 22k 1/18W
IC851 μPC393G2
OUTA
IN A-
IN A+
V-
V+
OUTB
IN B-
IN B+
0
5.0
5.0
5.0
0
0
C858 1000p
R888 4.7M 1/18W
R885 56k 1/18W
R884 24k 1/18W
C858 47 18V
C857 0.1 25V
R883 1.8k 1/18W
R889 0.22 1/4W
R870 0.22 1/4W
C855 0.1 25V
C859 0.1 25V
R872 39k 1/18W
B-P3
(INVERTER)

B-883534<AEP>-B-P3 (24)

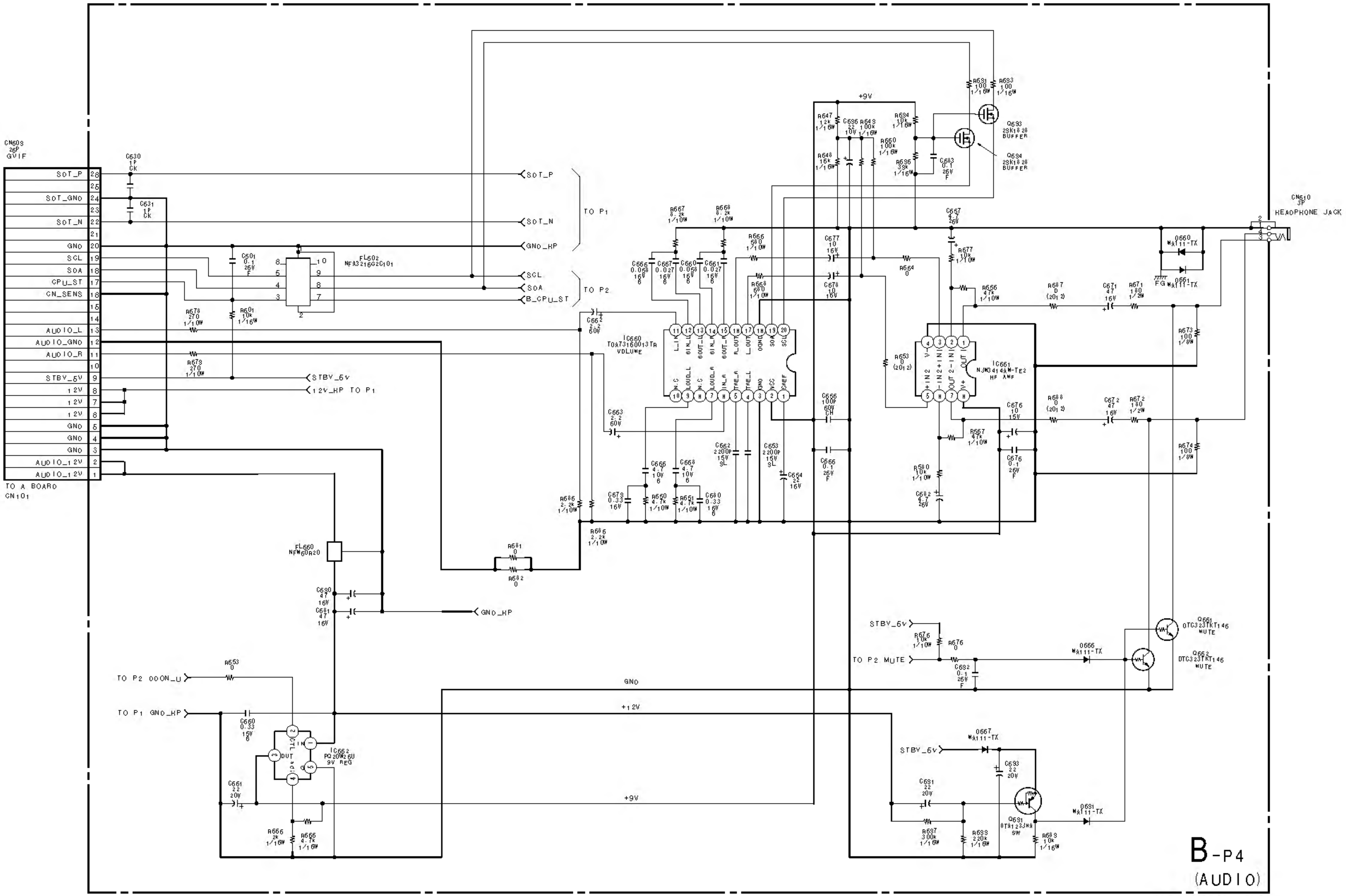
CN609 26P GVIF
SDT_P
SDT_GND
SDT_N
GND
SCL
SDA
CPU_ST
CN_SENS
AUDIO_L
AUDIO_GND
AUDIO_R
STBY_5V
12V
GND
AUDIO_12V
TO A BOARD CN101
C630 1P CK
C631 1P CK
C601 0.1 25V F
R601 10k 1/16W
FL602 NFA3216G2C101
R678 270 1/10W
R679 270 1/10W
TO P1
TO P2
SDT_P
SDT_N
GND_HP
SCL
SDA
B_CPU_ST
STBY_5V
12V_HP TO P1
IC660 TDA7316001TR VOLUME
IC661 NJM3414AM-TE2 HP AMP
Q633 2SK1828 BUFFER
Q634 2SK1828 BUFFER
+9V
CN610 3P HEADPHONE JACK
D660 MA111-TX
D661 MA111-TX
FL660 NFM60R20
GND_HP
TO P2 DOON_U
TO P1 GND_HP
IC662 PQ20WZ5U 9V REG
IN
OUT
GND
+12V
+9V
STBY_5V
TO P2 MUTE
Q661 DTC323TKT146 MUTE
Q662 DTC323TKT146 MUTE
D666 MA111-TX
D667 MA111-TX
D631 MA111-TX
Q631 DTA123JKA SW
B-P4
(AUDIO)

B-SS3534<AEP>-B-P4 (24)

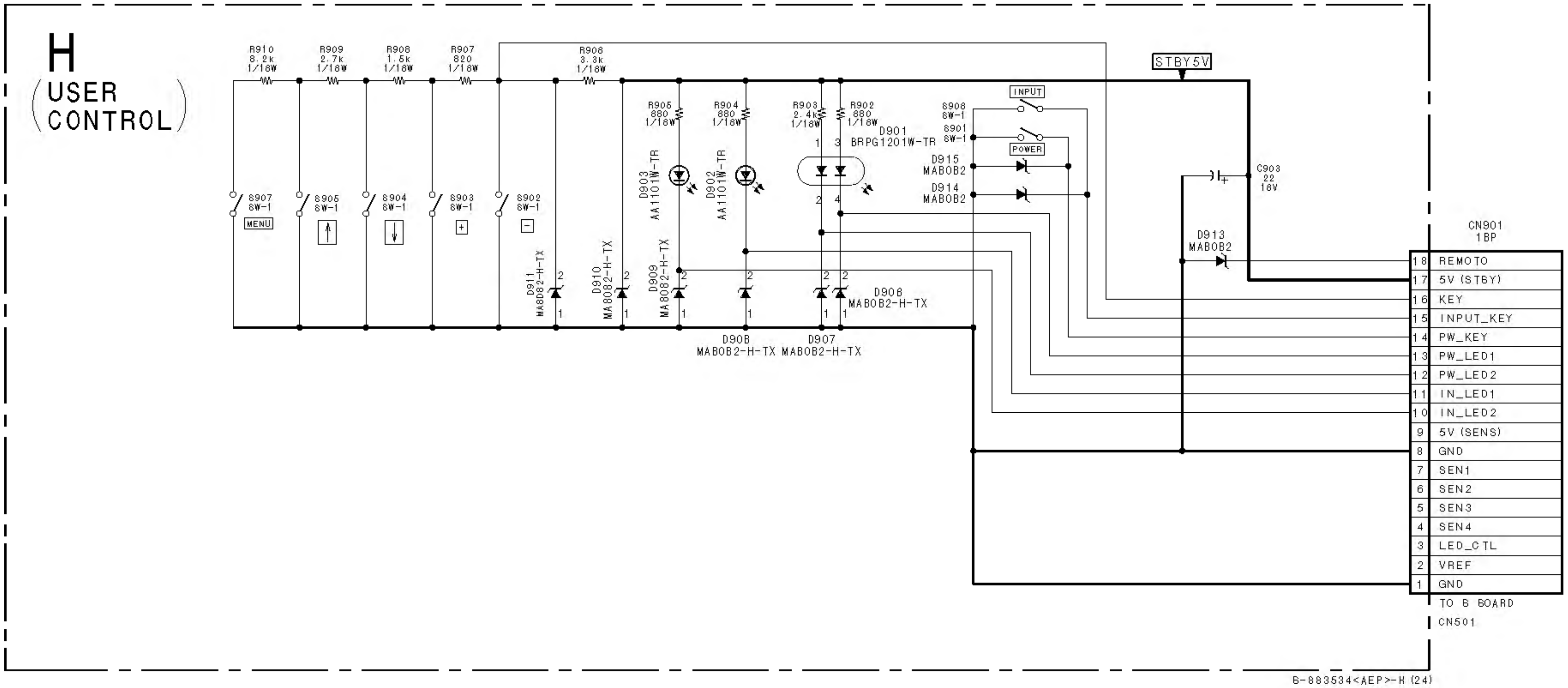
H
(USER CONTROL)
R910 8.2k 1/16W
R909 2.7k 1/16W
R908 1.5k 1/16W
R907 820 1/16W
R906 3.3k 1/16W
R905 680 1/16W
R904 680 1/16W
R903 2.4k 1/16W
R902 680 1/16W
S907 SW-1
MENU
S905 SW-1
↑
S904 SW-1
↓
S903 SW-1
+
S902 SW-1
−
D911 MA8082-H-TX
D910 MA8082-H-TX
D909 MA8082-H-TX
D903 AA1101W-TR
D902 AA1101W-TR
D901 BRPG1201W-TR
D906 MA8082-H-TX
D908 MA8082-H-TX
D907 MA8082-H-TX
S906 SW-1
INPUT
S901 SW-1
POWER
D915 MA8082
D914 MA8082
D913 MA8082
STBY5V
C903 22 16V
CN901 18P
18 REMOTO
17 5V (STBY)
16 KEY
15 INPUT_KEY
14 PW_KEY
13 PW_LED1
12 PW_LED2
11 IN_LED1
10 IN_LED2
9 5V (SENS)
8 GND
7 SEN1
6 SEN2
5 SEN3
4 SEN4
3 LED_CTL
2 VREF
1 GND
TO B BOARD CN501
B-883534<AEP>-H (24)

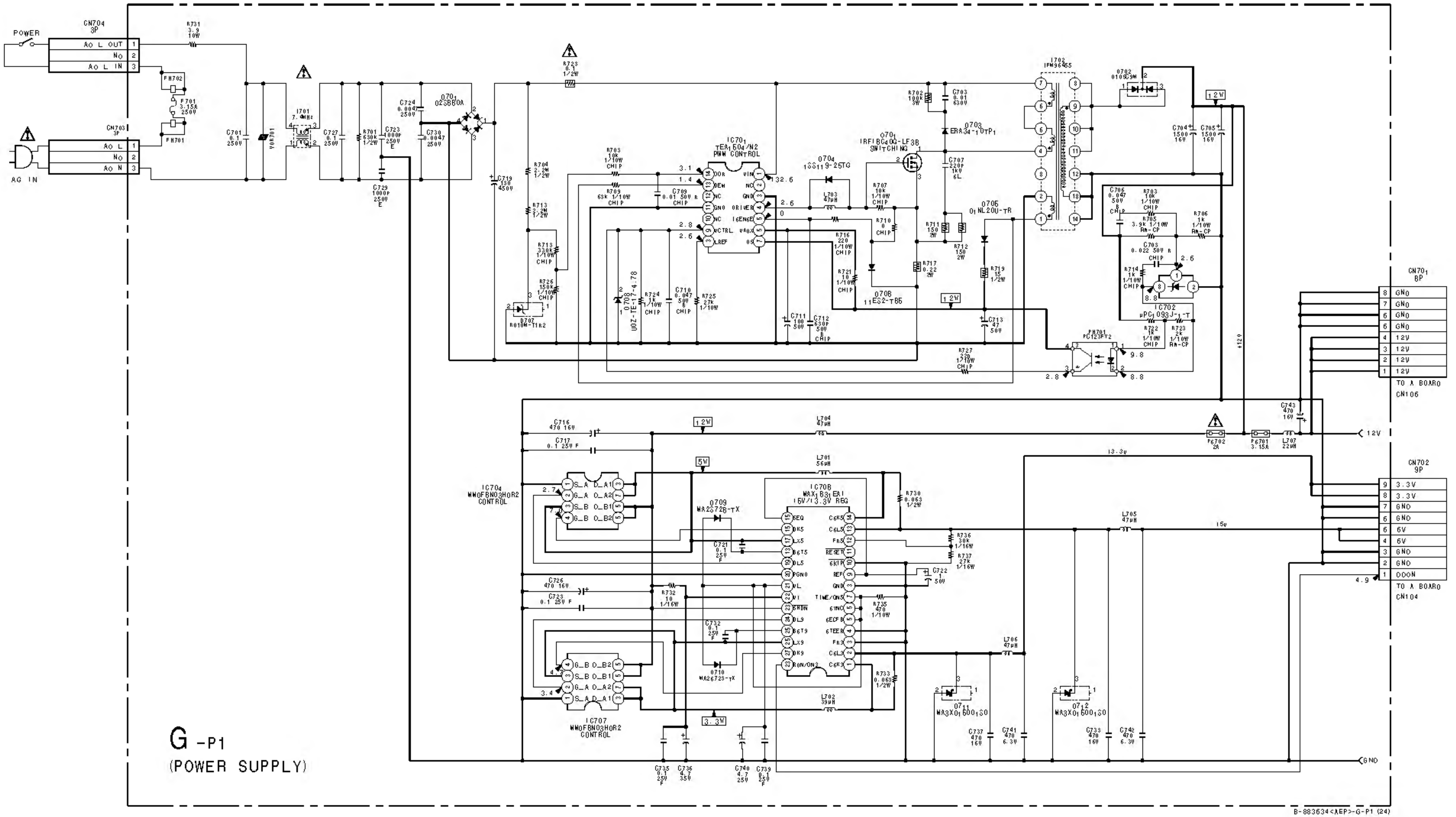
POWER
CN704 3P
AC L OUT
NC
AC L IN
CN703 3P
AC IN
R731 3.3 10W
F701 3.15A 250V
FH702
FH701
C701 0.1 250V
VDR701
L701 7.0mH
C727 0.1 250V
R701 680k 1/2W
C723 1000P 250V E
C724 0.0047 250V
C730 0.0047 250V
C729 1000P 250V E
D701 D2SB60A
R723 0.1 1/2W
C719 130 450V
R704 2.2M 1/2W
R713 2.2M 1/2W
R713 330k 1/10W CHIP
R726 150k 1/10W CHIP
D707 RD10M-T1B2
R703 10k 1/10W CHIP
R709 63k 1/10W CHIP
C709 0.01 50V B CHIP
IC701 TEA1504/N2 PWM CONTROL
DEM
NC
GND
DRIVER
ISENSE
VAUX
OS
VIN
CTRL
IREF
D708 UDZ-TE-17-4.7B
R724 1k 1/10W CHIP
C710 0.047 50V B CHIP
R725 27k 1/10W
C711 100 50V
C712 330P 50V B CHIP
D704 1SS119-25TG
L703 47µH
R707 10k 1/10W CHIP
R716 220 1/10W CHIP
R710 0 CHIP
R721 10 1/10W CHIP
Q701 IRFIBC40G-LF3B SWITCHING
R702 100k 3W
C703 0.01 630V
D703 ERA34-10TP1
C707 220P 1kV SL
R711 150 2W
R712 150 2W
R717 0.22 2W
D705 D1NL20U-TR
R719 15 1/2W
D706 11ES2-T65
C713 47 50V
R727 220 1/10W CHIP
T702 IPM96465
D702 D10SC9M
C704 1500 16V
C705 1500 16V
C706 0.047 50V B CHIP
R703 10k 1/10W CHIP
R705 3.9k 1/10W RN-CP
R706 1k 1/10W RN-CP
C708 0.022 50V B CHIP
R714 1k 1/10W CHIP
IC702 µPC1093J-1-T
R722 1k 1/10W CHIP
R723 2k 1/10W RN-CP
PH701 PC123FY2
12V
CN701 8P
GND
12V
TO A BOARD CN106
C743 470 16V
PS702 2A
PS701 3.15A
L707 22µH
L704 47µH
C716 470 16V
C717 0.1 25V F
IC704 MMOFBN03HOR2 CONTROL
S_A D_A1
G_A D_A2
S_B D_B1
G_B D_B2
L701 56µH
5V
IC708 MAX1631EAI 15V/3.3V REG
R730 0.063 1/2W
D709 MA2S728-TX
C721 0.1 25V F
13.3V
L705 47µH
15V
R736 30k 1/16W
R737 27k 1/16W
C722 1 50V
C726 470 16V
C723 0.1 25V F
R732 10 1/16W
R735 470 1/10W
C732 0.1 25V F
D710 MA2S728-TX
L706 47µH
R733 0.063 1/2W
IC707 MMOFBN03HOR2 CONTROL
L702 39µH
3.3V
D711 MA3X01600LSO
D712 MA3X01600LSO
C737 470 16V
C741 470 6.3V
C733 470 16V
C742 470 6.3V
C735 0.1 25V F
C736 4.7 35V
C740 4.7 25V
C739 0.1 25V F
CN702 9P
3.3V
6V
DOON
TO A BOARD CN104
GND

G -P1
(POWER SUPPLY)

B-883634<AEP>-G-P1 (24)

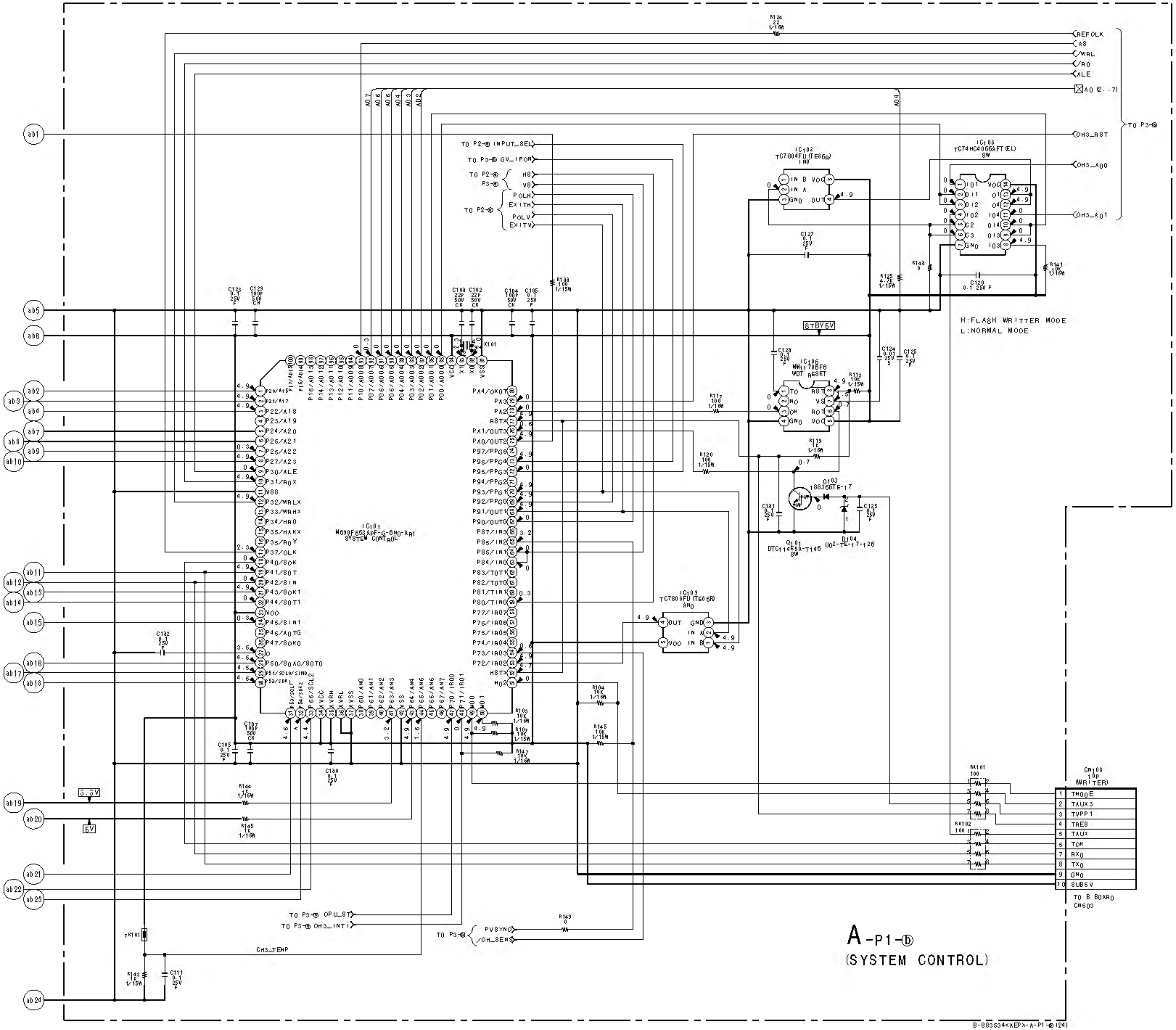
R124 22 1/16W
REFCLK
A8
/WRL
/RD
ALE
A0 (2..7)
TO P3-ⓐ
OH3_RST
OH3_A00
OH3_A01
A07
A06
A05
A04
A03
A02
A04
IC102 TC7S04FU (TE85R) INV
IN B
IN A
GND
VCC
OUT
IC108 TC74HC4066AFT (EL) SW
I01
O11
O12
I02
C2
C3
GND
VCC
O1
O4
I04
O14
O13
I03
C127 0.1 25V F
R125 4.7K 1/15W
R143 0
R141 10K 1/16W
C120 0.1 25V F
H:FLASH WRITTER MODE
L:NORMAL MODE
STBY5V
TO P2-ⓑ INPUT_SEL
TO P3-ⓑ GV_IFON
TO P2-ⓑ P3-ⓑ
HS
VS
TO P2-ⓑ
POLH
EXITH
POLV
EXITV
R133 100 1/15W
C123 0.1 25V F
C129 100P 50V CH
C103 22P 50V CH
C102 22P 50V CH
C104 100P 50V CH
C105 0.1 25V F
X101
IC101
M30F653ApF-G-6N0-AR1
SYSTEM CONTROL
P20/A15
P21/A17
P22/A18
P23/A19
P24/A20
P25/A21
P26/A22
P27/A23
P30/ALE
P31/RDX
VSS
P32/WRLX
P33/WRHX
P34/HRQ
P35/HAKX
P36/RDY
P37/CLK
P40/SCK
P41/SOT
P42/SIN
P43/SCK1
P44/SOT1
VDD
P45/SIN1
P46/ADTG
P47/SCK0
C
P50/SDA0/SOT0
P51/SCL0/SIN0
P52/SDA
P17/AD15
P16/AD14
P15/AD13
P14/AD12
P13/AD11
P12/AD10
P11/AD09
P10/AD08
P07/AD07
P06/AD06
P05/AD05
P04/AD04
P03/AD03
P02/AD02
P01/AD01
P00/AD00
VCC
X1
X0
VSS
PA4/CKOT
PA3
PA2
RSTX
PA1/OUT3
PA0/OUT2
P97/PPG5
P96/PPG4
P95/PPG3
P94/PPG2
P93/PPG1
P92/PPG0
P91/OUT1
P90/OUT0
P87/IN3
P86/IN2
P85/IN1
P84/IN0
P83/TOT1
P82/TOT0
P81/TIN1
P80/TIN0
P77/IRQ7
P76/IRQ6
P75/IRQ5
P74/IRQ4
P73/IRQ3
P72/IRQ2
HSTX
MD2
P53/SCL
P54/SDA2
P55/SCL2
AVCC
AVRH
AVRL
AVSS
P60/AN0
P61/AN1
P62/AN2
P63/AN3
VSS
P64/AN4
P65/AN5
P66/AN6
P67/AN7
P70/IRQ0
P71/IRQ1
MD0
MD1
IC106 MM1170BF6 WDT RESET
TC
NC
CK
GND
RST
VS
RCT
VCC
C128 0.1 25V F
C124 0.01 25V S
C125 0.1 25V F
R113 10K 1/15W
R117 100 1/16W
R119 1K 1/16W
R120 100 1/15W
C131 0.1 25V F
Q101 DTC114ESA-T146 SW
D103 1SS355TE-17
D104 UDZ-TE-17-12B
C126 0.1 25V F
IC109 TC7S08FU (TE85R) AND
OUT
GND
IN A
IN B
VDD
C132 1 25V F
C107 100P 50V CH
C105 0.1 25V F
C130 0.1 25V F
R103 10K 1/16W
R107 10K 1/15W
R147 10K 1/16W
R104 10K 1/16W
R146 10K 1/15W
R144 1K 1/16W
R145 1K 1/16W
3.3V
5V
RA101 100
RA102 100
CN106 10P (WRITER)
1 TMODE
2 TAUX3
3 TVPP1
4 TRES
5 TAUX
5 TCK
7 RXD
8 TXD
9 GND
10 SUB5V
TO B BOARD CN503
TO P3-ⓑ OPU_ST
TO P3-ⓑ OH3_INT1
TO P3-ⓑ PVSYNC
/OH_SENS
R149 0
TH101
CH3_TEMP
R142 1K 1/15W
C111 0.1 25V F
ab1
ab2
ab3
ab4
ab5
ab6
ab7
ab8
ab9
ab10
ab11
ab12
ab13
ab14
ab15
ab16
ab17
ab18
ab19
ab20
ab21
ab22
ab23
ab24

A-P1-ⓑ

(SYSTEM CONTROL)

B-883534<AEP>-A-P1-ⓑ(24)